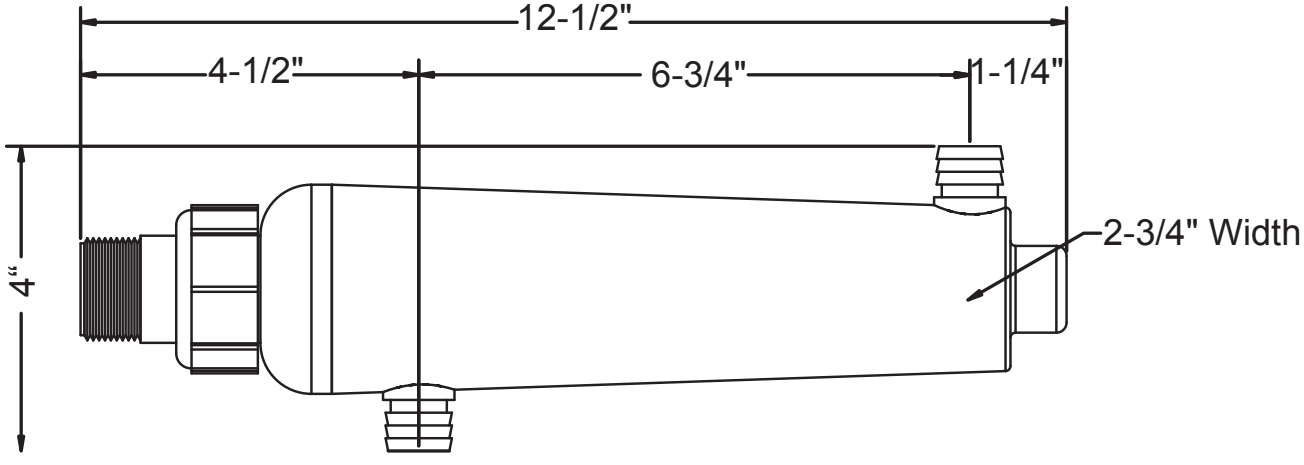
12-1/2"
4-1/2"
6-3/4"
1-1/4"
2-3/4" Width
4"

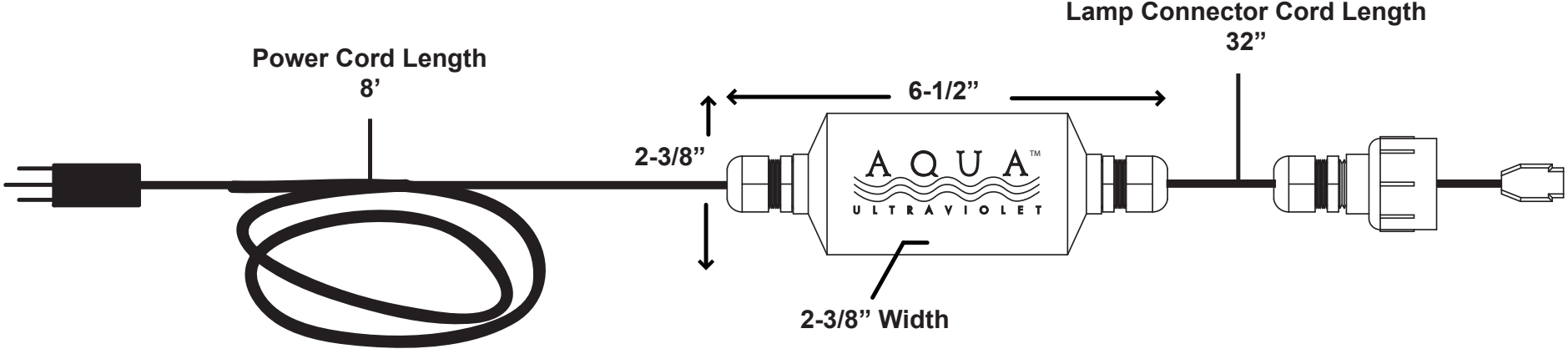
Lamp Connector Cord Length
32"
Power Cord Length
8'
6-1/2"
2-3/8"
AQUA™
ULTRAVIOLET
2-3/8" Width