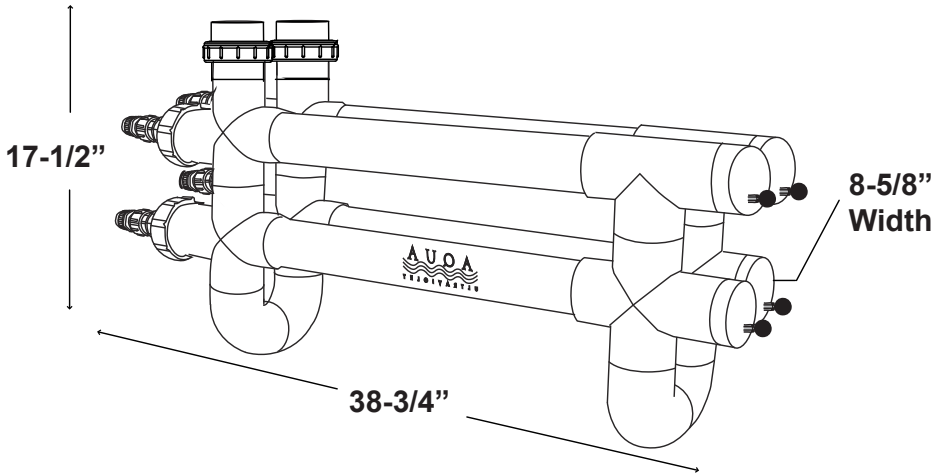
17-1/2”
8-5/8”
Width
38-3/4”

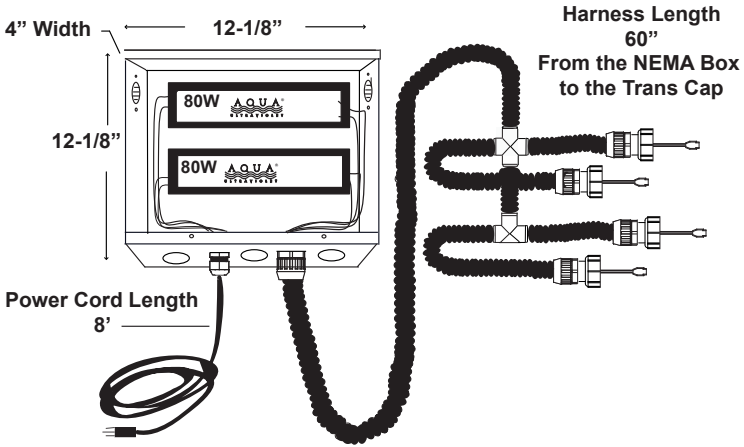
4” Width
12-1/8”
12-1/8”
80W
80W
Harness Length
60”
From the NEMA Box
to the Trans Cap
Power Cord Length
8’